special communications

# Impedance loading servo pump system for excised canine ventricle

KENJI SUNAGAWA, DAN BURKHOFF, KELVIN O. LIM, AND KIICHI SAGAWA
*Department of Biomedical Engineering, The Johns Hopkins Medical School, Baltimore, Maryland 21205*

SUNAGAWA, KENJI, DAN BURKHOFF, KELVIN O. LIM, AND KIICHI SAGAWA. *Impedance loading servo pump system for excised canine ventricle.* Am. J. Physiol. 243 (Heart Circ. Physiol. 12): H346–H350, 1982.—To investigate ventricular-arterial system interaction, we have developed a hybrid-computer-controlled impedance loading servo pump system that enables us to impose a simulated arterial hydraulic impedance on an excised canine ventricle. An analog computer programmed to simulate a three-element Windkessel model of the arterial system computes instantaneous aortic flow from the instantaneous ventricular pressure. The time integral of this flow is used to command a volume servo pump system that controls the instantaneous ventricular volume. All parameter values in the loading system are controlled by a digital computer. The actual impedance spectrum generated by the system was reasonably close to that expected from the arterial model. The unique features of this system are the following. *1)* The instantaneous volume of the ventricle, which is crucial information for the analysis of the ventricular-arterial system interaction, can be measured. *2)* If needed, the arterial impedance model can easily be reprogrammed to generate more complex impedance spectra. *3)* The vascular parameters can be made nonlinear or time varying through the digital computer control.

ventricular volume servo pump; hybrid computer

WE HAVE BEEN USING a servo pump system to control the volume of isolated canine hearts (9). In this system the volume of the ventricle follows a prescribed volume command signal that we synthesized out of an exponential curve independently of ventricular pressure. This feature allowed us to characterize the mechanical properties of the ventricle, as the instantaneous pressure changes reflect the properties of the ventricle under known ventricular volume changes (2, 8, 13). However, under physiological conditions where the ventricle ejects into the natural arterial tree, the time course of ventricular volume change is not solely determined by the ventricular properties but also by the arterial load properties. That is, the instantaneous volume change of the ventricle is determined by the nature of the interaction between the left ventricle and the arterial load.

To study cardiac performance under more physiological conditions, which include the ventricular-arterial interaction, we have developed a new ventricular volume servo pump system that enables us to impose a simulated arterial hydraulic impedance on excised canine ventricles by use of hybrid computer.

## DESCRIPTION OF SYSTEM

The system consists of three components as shown in Fig. 1. A volume servo pump precisely controls the instantaneous volume of an excised canine ventricle so that the ventricular volume will be the same as the command signal that is generated by the loading system.

Using the instantaneous ventricular pressure, the loading system calculates instantaneous flow from the ventricle to the simulated arterial load during systole and the flow from the simulated atrium into the ventricle during diastole. This instantaneous flow is integrated, producing an instantaneous volume command signal for the volume servo pump. All these real time computations are done by an analog computer (Comdyna 808 Analog Signal Processor).

A microprocessor (Zilog Z80)-based computer (Radio Shack TRS-80) controls the loading system parameters so that one can adjust loading conditions using the computer console. Furthermore, the computer can be used to control the pacing rate and coronary perfusion pressure if these are desired.

### *Volume Servo Pump*

To control ventricular volume, a balloon is positioned in the ventricle and a balloon holder is secured inside the mitral ring. As mentioned above, the balloon volume is controlled by a volume servo pump, which is described by Suga and Sagawa (9) and Sunagawa et al. (10). The balloon is connected to a fluid-filled piston pump as shown in Fig. 1. A linear motor (Ling Electronics, model 411) controls the position of the piston. The balloon volume is measured by a linear-displacement transducer that moves up and down with the linear motor shaft. The

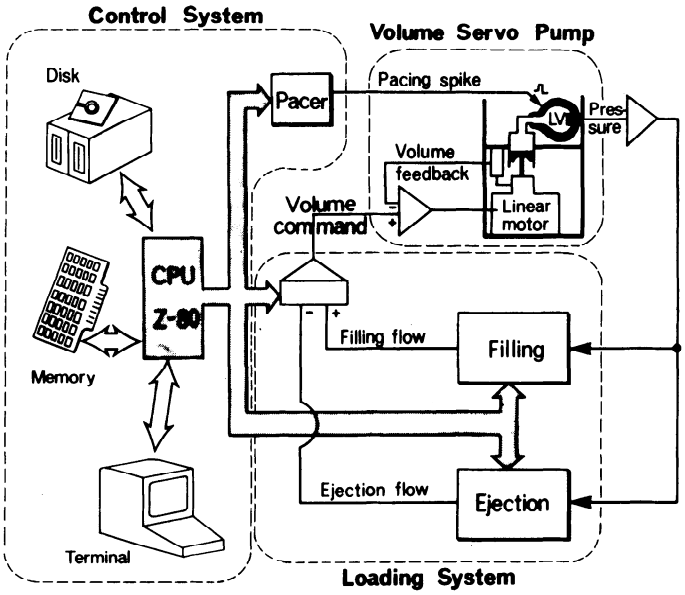


FIG. 1. Entire system consisting of 3 subsystems. *1)* Volume servo pump with linear motor controls instantaneous ventricular volume according to volume command signal generated by loading system. Instantaneous ventricular pressure and volume are measured. *2)* Loading system computes filling flow into and ejection flow out of ventricle using mathematical models of preload and afterload system from instantaneous ventricular pressure. Computation is performed instantaneously by an analog computer. Time integral of flow is used to command servo pump system. *3)* Control system (which consists of a digital computer) sets gain of analog computer's amplifiers, allowing us to vary the parameters of afterload-preload system.

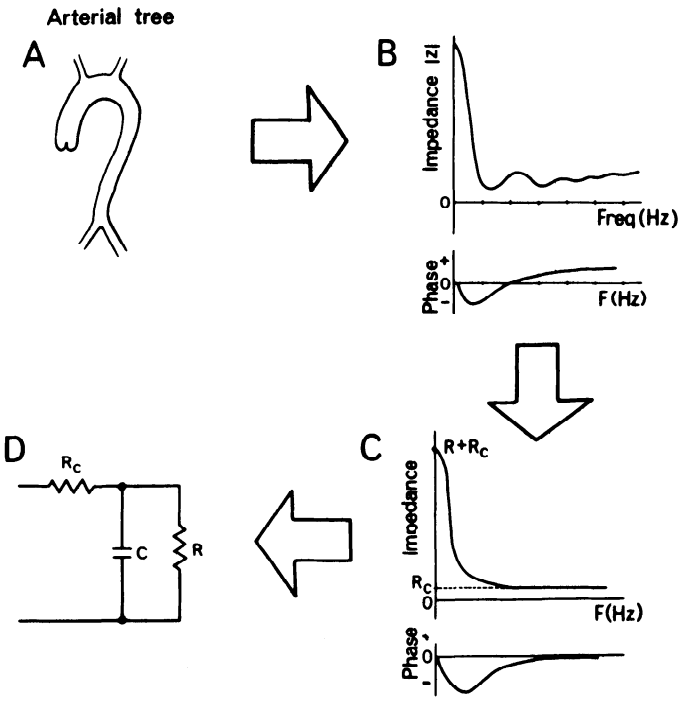


FIG. 2. Afterload system. Hydraulic property of arterial tree (*A*) is represented by an impedance spectrum (*B*). Complex impedance spectrum is simplified (*C*) so that it can be mathematically modeled. Simplified impedance spectrum is realized by analog circuit shown in *D*. $R_c$, characteristic resistance; R, peripheral resistance; C, compliance.

instantaneous balloon volume is subtracted from the command signal, producing an error signal. The error signal is amplified by a power amplifier, which drives the linear motor.

### *Loading System*

The frequency spectrum of the input impedance of the arterial tree is considered to be a reasonable representation of the hydraulic properties of the vascular bed (4–6). However, the impedance spectrum is too complex to be represented by a simple mathematical model (Fig. 2*B*). Therefore, we used a simplified impedance spectrum (Fig. 2*C*) that can be realized by a three-element Windkessel model (Fig. 2*D*). With this model the impedance modulus decreases smoothly with an increase in frequency and asymptotically approaches the characteristic impedance ($R_c$). The slope of the moduli vs. frequency at low frequency is determined by the vascular resistance (R) and lumped arterial compliance (C). In the natural arterial tree, aortic pressure lags behind aortic flow in the low-frequency range and leads the flow in the high-frequency range (4–7, 14, 15). However, with this three-element model, the pressure never leads the flow. Therefore, the similarity between the three-element model and the natural arterial tree is best in the low-frequency range. The magnitude of the low-frequency components of pressure and flow in the natural arterial tree are much larger than the high-frequency components. It is therefore most important that the simulated impedance closely matches the natural impedance in the low-frequency range.

Figure 3*A* shows an electrical circuit equivalent to our impedance-loading servo pump system. The ventricle is filled with a constant filling pressure ($P_{la}$) through the filling resistance ($R_{la}$) and the mitral valve (MV). The ventricle ejects into the arterial system through the aortic valve (AV). This circuit is programmed on the analog computer (Fig. 3*B*) in order to calculate the instantaneous volume change of the ventricle that would occur if the ventricle were actually coupled with this loading system.

The sequence of calculation of the ventricular volume change follows.

*Ejection phase.* A difference amplifier (AMP-2) compares instantaneous left ventricular pressure ($P_{lv}$) with arterial pressure ($P_C$) across the arterial compliance. While $P_{lv}$ is lower than $P_C$, the "aortic valve" remains closed, i.e., the balloon volume is not allowed to decrease (isovolumic contraction).

When $P_{lv}$ becomes higher than $P_C$, the aortic valve opens, i.e., the balloon volume is allowed to decrease, and the ejection flow is calculated by dividing the pressure difference between $P_{lv}$ and $P_C$ by $R_c$.

The computed instantaneous flow is integrated by an integrator (INT-1) giving instantaneous ventricular volume. This volume signal commands the servo pump to withdraw a certain volume from the ventricle.

The same instantaneous ejection flow is integrated by INT-2 and fills the arterial compliance (C). The compliance discharges continuously throughout the cardiac cycle at a rate proportional to $P_C$ through the vascular resistance (R).

When $P_{lv}$ becomes lower than $P_C$, the aortic valve closes and the balloon volume is again clamped.

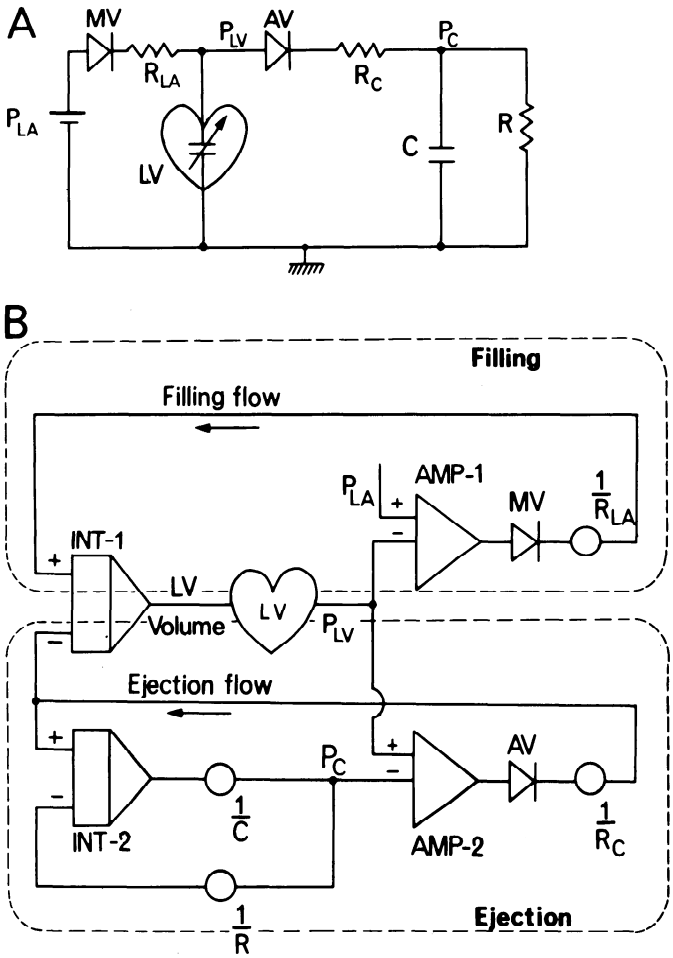


FIG. 3. *A*: electrical circuit representation of impedance-loading servo pump system. Pressure source ($P_{la}$) fills ventricle through a resistance ($R_{la}$) during diastole through mitral valve (MV), which is represented by a diode. Ventricle ejects into the 3-element arterial-tree model ($R_c$, characteristic impedance; R, peripheral resistance; and C, arterial compliance) through aortic valve (AV) during systole. $P_{lv}$ is ventricular pressure and $P_C$ is a pressure across the arterial compliance. *B*: Example of analog computer programming for preload and afterload. LV in heart represents ventricle attached to volume servo pump. One can control instantaneous ventricular volume with pump, and resultant output is instantaneous ventricular pressure ($P_{lv}$). Program consists of filling flow-computation phase and ejection flow-computation phase. Filling flow is calculated from difference between filling pressure ($P_{la}$) and $P_{lv}$ divided by filling resistance ($R_{la}$). Ejection flow is calculated from difference between $P_{lv}$ and $P_C$ divided by characteristic impedance ($R_c$). These instantaneous flows are integrated, and the resultant instantaneous volume signal is used to command volume servo pump. INT-1 and INT-2 represent integrators. AMP-1 and AMP-2 represent difference amplifiers. All parameter values ($P_{la}$, $R_{la}$, $R_c$, R, and C) are set by digital-computer-controlled variable-gain amplifiers as explained in Fig. 5.

*Filling phase.* A difference amplifier (AMP-1) compares instantaneous $P_{lv}$ with a constant filling pressure ($P_{la}$), and the mitral valve remains closed; i.e., the balloon volume is not allowed to increase (isovolumic relaxation).

When $P_{lv}$ becomes lower than $P_{la}$, the mitral valve opens and the balloon volume is allowed to increase. The filling flow is calculated by dividing the pressure difference between $P_{lv}$ and $P_{la}$ by $R_{la}$. This calculated instantaneous filling flow is integrated by INT-1, and the resultant instantaneous ventricular volume is used to command the volume servo pump to fill the ventricle.

### *Normal Values for Afterload Parameters*

Cardiac output of the dog is approximately 100 ml·min$^{-1}$·kg body wt$^{-1}$ (1). In our experiments the weight of the donor dog is usually about 20 kg, which gives us an average cardiac output of about 30 ml/s. The mean arterial pressure of a healthy dog is about 100 mmHg. Therefore, the total resistance (i.e., $R_c$ + R) is about 3.0 mmHg·s·ml$^{-1}$. Since the characteristic impedance is known to be 5–10% of the total resistance (4–7, 14, 15) we set the normal $R_c$ value to 0.2 mmHg·s·ml$^{-1}$ and the R value to 3.0 mmHg s·ml$^{-1}$. The time constant of decay of arterial pressure (R × C in the 3-element model) is about 1.1 s (14, 15); therefore, we set the vascular compliance value at 0.4 ml/mmHg.

### *Compensation*

Inasmuch as the volume command signal is computed by the analog computer, there is no substantial delay in its calculation. Therefore, the system stability and the fidelity with which the impedance afterload may be imposed on the excised ventricle are highly dependent on the response time of the volume servo pump. To minimize this response time, we feed forward a fraction of the instantaneous ejection flow signal to the volume servo pump as shown in Fig. 4. The gain of the compensation is empirically determined by adjusting a potentiometer ($R_F$) to minimize the system instability.

### *Computer-Controlled Variable Gain Amplifier*

All of the parameter-setting potentiometers in the analog computer were replaced with digital-computer-controlled variable-gain amplifiers using two digital-to-analog converters (D/A) as shown in Fig. 5. With this configuration, the input voltage ($V_{in}$) is scaled by the ratio of the digital codes, [D1] and [D2], which are loaded into the D/A converters by the digital computer. The voltage output ($V_{out}$) is

$$V_{out} = V_{in}[D1]/[D2]$$

Because these digital codes vary between 0 and 255 in our system (8 bit D/A converter), we can get a wide range of attenuation and amplification with this device.

## RESULTS

To test the accuracy of the impedance generated by

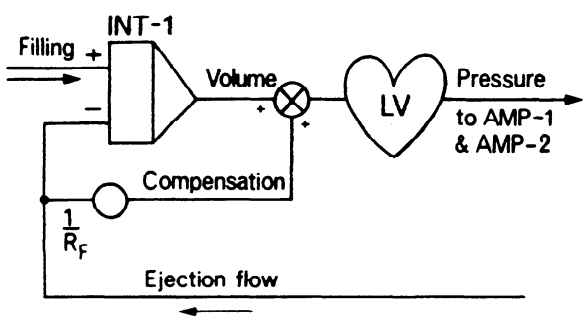


FIG. 4. Schematic diagram of compensation circuit. A fraction of ejection flow ($1/R_F$) is fed forward directly to volume servo pump. The amount of compensation is optimized so that system instability becomes minimal. Abbreviations (INT-1, AMP-1, and AMP-2) as in Fig. 3.

the system, we compared the theoretical impedance spectrum calculated using the values we specified for R, C, and $R_c$ with that measured from the ventricular outflow (which was obtained by differentiating a real volume change of the excised ventricle) and aortic pressure in the simulated loading system. Figure 6 shows examples of these impedance spectra. Without compensation, the impedance modulus is reasonably close to the theoretical value in the low-frequency range but tends to be larger than the theoretical value in the high-frequency range. The aortic flow leads the pressure only at frequencies lower than 5 Hz. With the feed forward compensation,

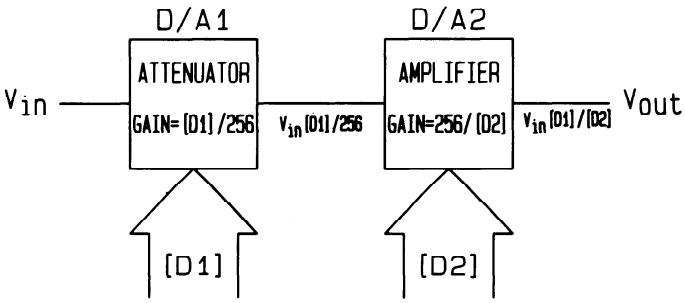


FIG. 5. Computer-controlled variable-gain amplifier. A variable-gain amplifier is realized using 2 digital-to-analog converters (8 bit D/A converter); one for attenuation, the other for amplification. Attenuation or amplification of variable-gain amplifier is determined by 2 bytes of digital computer. [D1] and [D2] represent 1 byte (8 bit) of digital code ranging between 0 and 255.

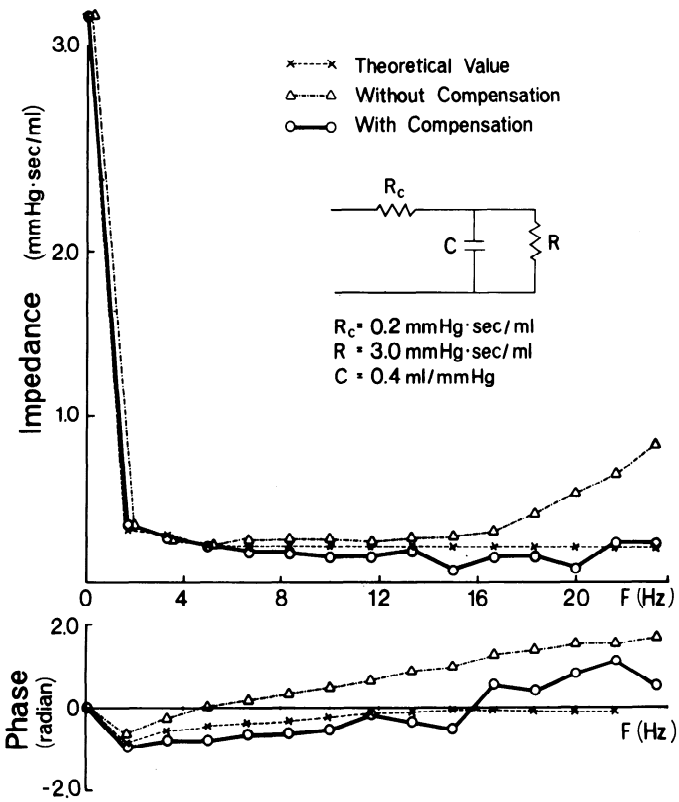


FIG. 6. Examples of impedance spectrum generated by impedance-loading servo pump system. Without compensation (△), impedance modulus tends to be larger than the theoretically expected value (×) in high-frequency range, and the pressure leads flow (because of servo pump response delay) even in low-frequency range. With compensation (○), impedance modulus becomes reasonably flat and pressure lags for up to 15 Hz.

the impedance modulus stays relatively flat throughout the measured frequency range, and the flow leads the pressure up to a frequency of 15 Hz, indicating that the realized impedance is very close to the theoretical (desired) one. This similarity is well maintained over the complete range of parameter values tested (from ¼ control to 4 times the control value of each parameters).

The effect of resistance changes on the instantaneous left ventricular pressure and volume are shown in Fig. 7. The resistance was varied from 1.5 $mmHg \cdot s \cdot ml^{-1}$ to 12 $mmHg \cdot s \cdot ml^{-1}$ while arterial compliance was held constant (C, 0.4 ml·mmHg). The stroke volume varied widely with these changes in resistance. Figure 8 shows the effect of arterial compliance changes on instantaneous left ventricular pressure and volume. The compliance was varied from 0.1 to 0.8 ml/mmHg while vascular resistance was held constant (R, 3.0 mmHg $s \cdot ml^{-1}$). Despite the wide range of compliance change, the stroke volume was only slightly affected.

Since the volume command signal is generated by integration of aortic flow calculated by the loading system, isovolumic contractions can be realized by discontinuing this integration and holding the output of INT-1 in Fig. 3*B* at the desired value.

## DISCUSSION

A hydraulic impedance loading system for feline excised ventricles was successfully implemented by Westerhof et al. (14), and very recently a similar hydraulic loading system for excised canine ventricles was developed by Ishide et al. (3). Even though the characteristics of the impedance generated by our system are quite similar to these hydraulic systems, there are several

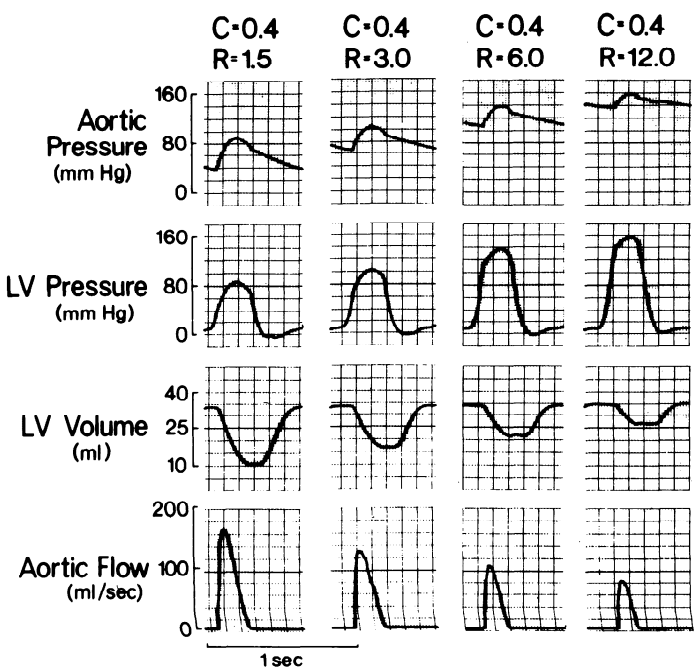


FIG. 7. Effect of changing resistance (R) on ventricular pressure and volume under a constant arterial compliance (C, 0.4 ml/mmHg), characteristic impedance ($R_c$, 0.2 $mmHg \cdot s \cdot ml^{-1}$), and a filling pressure with a constant heart rate (110 beats/min). As R was increased from 1.5 to 12 $mmHg \cdot s \cdot ml^{-1}$, the stroke volume was varied.

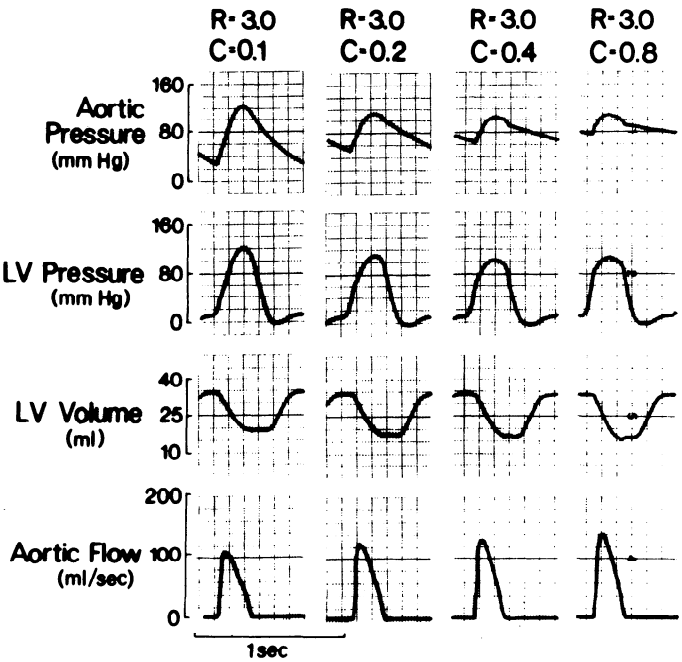


FIG. 8. Effect of changing arterial compliance (C) on ventricular pressure and volume under a constant resistance (R, 3.0 mmHg·s·ml$^{-1}$), characteristic impedance ($R_c$, 0.2 mmHg·s·ml$^{-1}$), and a filling pressure with a constant heart rate (110 beats/min). Despite change in C from 0.1 to 0.8 ml/mmHg, the stroke volume was only slightly affected.

unique features in our system that distinguish it from the hydraulic system.

First, our system can precisely measure the instantaneous volume of the ventricle. This cannot be done easily with the hydraulic loading systems mentioned above. This feature is indispensable for studying ventricular mechanics.

Second, this system is extremely easy to use. Unlike the hydraulic system, in which narrow tubings create vascular resistances and air chambers create compliances (3, 14), these vascular parameters are realized by electronic components in the analog computer. This substitution of electronic components for physical hydraulic components makes the control of the loading system simpler and more flexible. Unlike the hydraulic system, it can be used to control larger or small hearts without any change in its physical dimensions. Because a digital computer controls all the electronic components through computer-controlled variable-gain amplifiers, we can precisely set the vascular parameter values from a keyboard. The time required to change a vascular parameter is less than 10 μs. The reproducibility of the parameters is virtually perfect.

Finally, with our system we can generate more complex arterial impedances than reported here simply by reprogramming the analog computer. For example, an impedance spectrum that has multiple reflection peaks like a natural arterial-tree impedance can be modeled. Another versatile aspect of the system is that we can easily generate multiple nonlinear and/or time-varying properties such as nonlinear compliance and time-varying resistance, using the computer-controlled amplifiers described above.

In conclusion, the present loading system enables us to impose a wide variety of vascular impedances on an isolated canine ventricle. This enables us to take advantage of the unique features of the isolated heart preparation while it allows us to study ventricular contraction under more physiological conditions. With this loading system, we can investigate the effects of changing certain vascular impedance parameters on ventricular contraction (12) without any interference by neurohumoral mechanisms on ventricular contractility as in the in vivo preparation. Furthermore, the ability to accurately measure the instantaneous volume of the ventricle makes this loading system a powerful tool to characterize ventricular contraction in terms of the pressure-volume relationship (11).

This research was supported by Grant HL-14903 from the National Institutes of Health.

Received 2 July 1981; accepted in final form 12 March 1982.

REFERENCES

1. GUYTON, G. C., C. E. JONES, AND T. G. COLEMAN. Normal cardiac output and its variation. In: *Circulatory Physiology: Cardiac Output and its Regulation* (2nd ed.). Philadelphia, PA: Saunders, 1973, p. 3–20.
2. HUNTER, W. C., J. S. JANICKI, K. T. WEBER, AND A. NOORDERGRAAF. Flow-pulse response: a new method for the characterization of ventricular mechanics. *Am. J. Physiol.* 237 (*Heart Circ. Physiol.* 6): H282–H292, 1979.
3. ISHIDE, N., Y. SHIMIZU, Y. MARUYAMA, Y. KOIWA, T. NUNOKAWA, S. ISOYAMA, S. KITAOKA, AND K. TAMAKI. Effects of changes in the aortic input impedance on systolic pressure-ejected volume relationships in the isolated supported canine left ventricle. *Cardiovasc. Res.* 14: 229–243, 1980.
4. MILNOR, W. R. Arterial impedance as ventricular afterload. *Circ. Res.* 36: 565–570, 1975.
5. NICHOLS, W. W., C. J. PEPINE, E. A. GEISER, AND R. CONTI. Vascular load defined by the aortic input impedance spectrum. *Federation Proc.* 39: 196–201, 1980.
6. NOBLE, M. M. Left ventricular load, arterial impedance and their interrelationship. *Cardiovasc. Res.* 13: 183–198, 1979.
7. O'ROURKE, M. F., AND M. G. TAYLOR. Input impedance of the systemic circulation. *Circ. Res.* 20: 365–380, 1967.
8. SUGA, H., A. KITABATAKE, AND K. SAGAWA. End-systolic pressure determines stroke volume from fixed end-diastolic volume in the isolated canine left ventricle under a constant contractile state. *Circ. Res.* 44: 238–249, 1979.
9. SUGA, H., AND K. SAGAWA. End-diastolic and end-systolic ventricular volume clamper for isolated canine heart. *Am. J. Physiol.* 233 (*Heart Circ. Physiol.* 2): H718–H722, 1977.
10. SUNAGAWA, K., K. O. LIM, D. BURKHOFF, AND K. SAGAWA. Microprocessor control of a ventricular volume servo-pump. *Ann. Biomed. Eng.* In press.
11. SUNAGAWA, K., W. L. MAUGHAN, D. BURKHOFF, AND K. SAGAWA. The effect of arterial impedance changes on the end-systolic pressure-volume relation (Abstract). *Circulation* 54: 209, 1981.
12. SUNAGAWA, K., W. L. MAUGHAN, AND K. SAGAWA. Ventricular interaction with arterial load (What determines stroke volume?) (Abstract). *Circulation* 54: 178, 1981.
13. TEMPLETON, G. H., AND L. R. NARDIZZI. Elastic and viscous stiffness of the canine left ventricle. *J. Appl. Physiol.* 36: 123–127, 1974.
14. WESTERHOF, N., G. ELZINGA, AND P. SIPKEMA. An artificial arterial system for pumping hearts. *J. Appl. Physiol.* 31: 776–781, 1971.
15. WESTERHOF, N., G. ELZINGA, AND G. C. VAN DEN BOS. Influence of central and peripheral changes on the hydraulic input impedance of the systemic arterial tree. *Med. Biol. Eng.* 11: 710–723, 1973.